Rinnai

Installation Manual

Split Type Wall Mounted Air Conditioner

Models: RINV25RB / RINV35RB / RINV52RB / RINV70RB

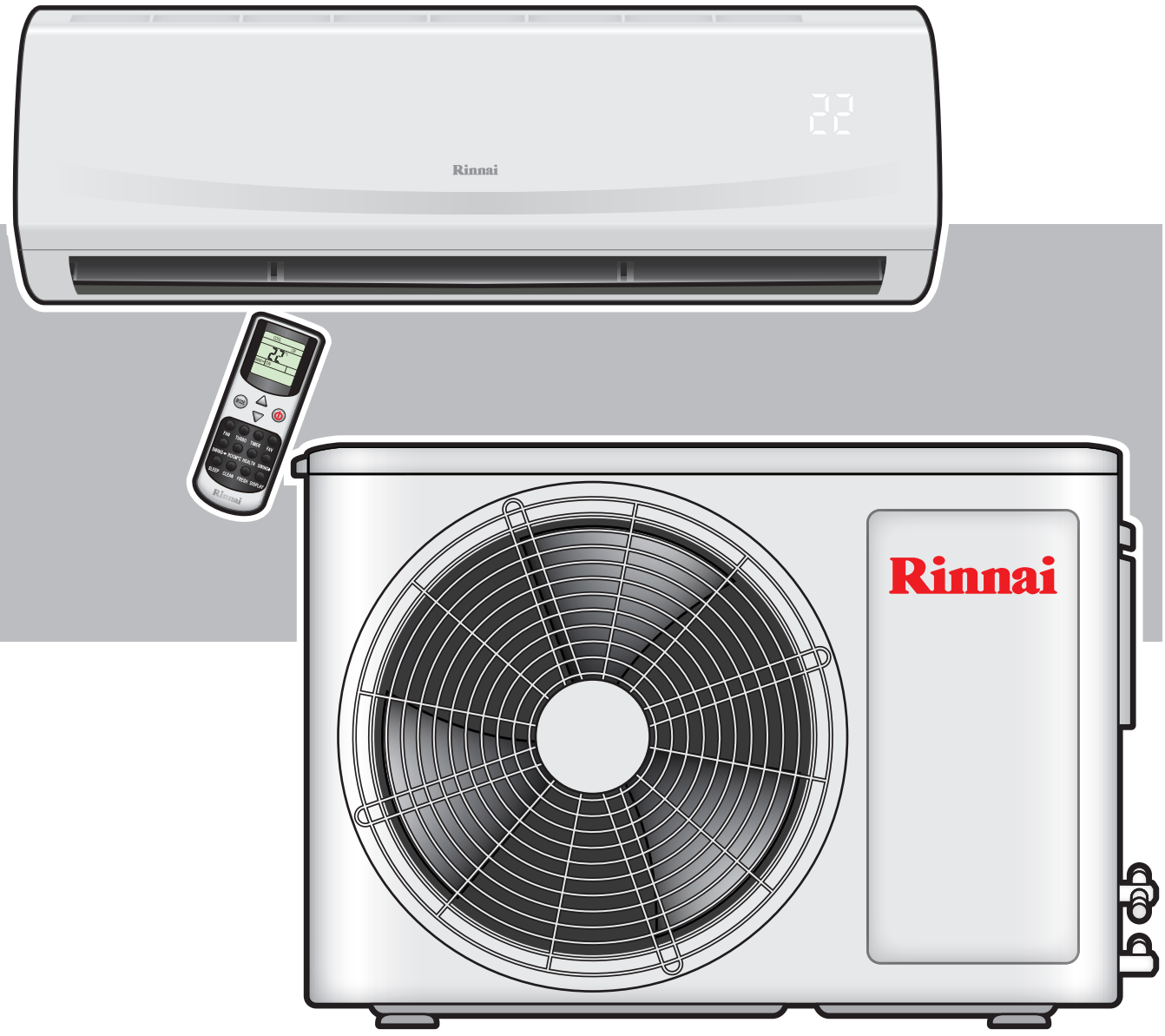

This appliance shall be installed in accordance with:

- Manufacturer's Installation Instructions
- Current AS/NZS 3000
- Local Regulations and Municipal Building Codes including local OH&S requirements

This appliance must be installed, maintained and removed by an Authorised Person.

For continued safety of this appliance it must be installed and maintained in accordance with the manufacturers instructions.

N10378

This page is intentionally blank

TABLE OF CONTENTS

Warnings and Important Information 4

INSTALLATION General 7

Contents Checklist 7
Appliance Components 7
Weights & Dimensions 7

Location 8

Indoor Unit 8
Outdoor Unit 8
Pipe Length & Elevation Limits 8

Installation 9

Indoor Unit 9
Wall Mounting Plate 9
Wall Penetration 9
Drain Pipe 9
Electrical Connections 10
Wall Installation 10
Outdoor Unit 12
Electrical Connections 12
Condensate Drain Installation 12
Refrigerant pipes 13
Flaring 13
Connecting Vapour / Liquid Pipes To Indoor & Outdoor Units 13
Air purging & Leakage Test 14
Evacuation Vacuum Method / Leak Test 14
Adding refrigerant for longer line length 14
Final Checklist 15

Contacts 16

WARNINGS AND IMPORTANT INFORMATION

IMPORTANT

READ ALL INSTRUCTIONS BEFORE USING THE APPLIANCE.

Always comply with the following precautions to avoid dangerous situations and to ensure optimum performance.

Failure to carefully read and follow all instructions in this manual can result in equipment malfunction, property damage, personal injury and/or death.

WARNINGS: WHEN IGNORED, CAN RESULT IN SERIOUS INJURY OR DEATH.

CAUTIONS: WHEN IGNORED, CAN RESULT IN MINOR INJURY OR PRODUCT DAMAGE.

WARNING

REGULATORY / INSTALLATION

This appliance shall be installed in accordance with:

Manufacturer's Installation Instructions.

Current AS/NZS 3000.

Local Regulations and Municipal Building Codes including local OH&S requirements.

This appliance must be installed, maintained and removed by an Authorised Person.

For continued safety of this appliance it must be installed and maintained in accordance with the manufacturers instructions.

This appliance uses R410A refrigerant.

This appliance is heavy, use 2 people or mechanical lifting device. Improper lifting may result in serious injury.

Take care when opening or unpacking this appliance. Failure to do so may result in serious injury or product failure.

DO NOT modify the electrical wiring of this appliance. If the control power wiring is damaged or deteriorated then it must be replaced by an authorized person. Failure to do so may result in electric shock, fire, serious injury or product failure.

DO NOT install the air conditioner on an unstable or non level surface or where there may be a danger of it falling. It may result in death, serious injury, or product failure.

DO NOT install the outdoor unit where noise may cause nuisance.

DO NOT install the outdoor unit where it will be exposed to sea wind (salt spray) as this will reduce durability.

OPERATION RANGE LIMITATIONS

The table below indicates the temperature ranges the air conditioner can be operated within.

MODE	TEMPERATURE SOURCE	MINIMUM OPERATION TEMPERATURE	MAXIMUM OPERATION TEMPERATURE
Cooling / Heating	Adjustable inside temperature	16°C	32°C
	Ambient outside temperature	-12°C	47°C



INSTALLATION WARNING

This appliance shall be installed in accordance with local electrical safety regulations by an authorised person such as a licensed electrician.

This appliance is Type 1 Electrical Appliance.

Make sure the live wire, neutral wire and earth wire in the power socket are properly connected. Inadequate or incorrect electrical connections may cause fire or electric shock.

The yellow-green wire in air conditioner is the earthing wire which cannot be used for other purposes. Improper earthing may cause electric shock.

The circuit breaker must have the functions of magnetic tripping and heat tripping to prevent short circuit and overload.

Use a standard circuit breaker and fuse conforming with the rating of the appliances.

Model	Circuit Breaker (Amps)
RINV25RB	10
RINV35RB	10
RINV52RB	15
RINV70RB	20

The unit must be earthed in accordance with local regulations.

Connect all wiring tightly. Failure to do so may result in electric shock or product failure.

Do not supply power to the unit until all wiring and tubing are completed.

Select an installation location where the components can be mounted securely and accessible for service and replacement.

Make sure tubing is properly insulated to ensure optimum performance.

Install the drain hose properly for smooth drainage of condensed water.

Make sure to check for and rectify any refrigerant leaks after you install or repair the unit.

WARNING

OPERATION

DO NOT let the air conditioner run for extended periods when the humidity is very high or when doors or windows are left open. As this may result in an excessive operational loading and lead to product failure.

DO NOT cover or place articles on any part of this appliance.

DO NOT touch, operate or clean the air conditioner with wet hands. It may result in electric shock or product failure.

DO NOT insert hands or other objects through the air inlet or outlet while the appliance. It may result in electric shock or product failure.

DO NOT place a heater or other heating appliances near this appliance, always ensure sufficient ventilation when using this appliance and a heating appliance at the same time. Failure to do so may result in product miss-operation.

Turn main power off before cleaning. Failure to do so may result in fire, electric shock, or product failure.

DO NOT use solvents, abrasives or harsh detergent to clean any part or surface of this appliance or spray water or allow liquids to enter the indoor unit. The enclosure of the appliance and remote control can be cleaned using a soft, damp cloth and a mild detergent.

NEVER touch the metal parts of the air conditioner when you remove the air filter. It may result in electric shock or product failure.

DO NOT leave flammable materials near the appliance. It may result in explosion or fire.

If there is excessive noise, smell or smoke coming from the appliance, turn the appliance **OFF,** isolate the power supply and contact a service agent.

DO NOT operate the appliance if it has been submerged into water due to flooding, contact a service agent. Failure to do so may result in electric shock, fire, serious injury, or product failure.

This appliance is **NOT** intended for use by persons (including children) with reduced physical, sensory or mental capabilities, or lack of experience and knowledge unless they have been given supervision or instruction concerning use of the appliance by a person responsible for their safety.

Children should be supervised to ensure that they do not play with the appliance.

The air conditioning system is designed to achieve consumer comfort. It is not designed for commercial applications required a controlled atmosphere (i.e. computer rooms, food preservation, etc.)

DO NOT block the inlet or outlet of air flow. It may result product failure.

DO NOT drink the condensate water drained from the appliance. This condensate is not potable and may present a health risk if consumed.

DO NOT expose people, animals or plants directly to the cold or hot discharge of the appliance. It may result in serious injury.

DO NOT mix the batteries for the remote control with other types of batteries or mix new batteries with used batteries. Failure to do so may result in product failure. **STOP** using the remote control if there is a battery fluid leak.

CONTENTS CHECKLIST

Item and quantity provided							
Indoor unit	x1	Indoor unit support bracket	x1	Drain pipe	x1	Putty	x1
Remote controller	x1	Outdoor unit	x1	Brass nut (small)	x2	Operation manual	x1
Remote control wall bracket	x1	Rubber vibration damper	x4	Brass nut (large)	x2	Installation manual	x1
AAA battery	x2	Drain plug	x1	Tape	x1	Energy label	x1

APPLIANCE COMPONENTS

1. Indoor unit air inlet
2. Filter (located behind front access panel)
3. Manual ON/OFF (Auto) override button and set temperature indicator* (located behind front access panel)
4. Indoor unit air outlet (with louvres and vanes for setting air flow direction)
5. Remote control
6. Signal receiver window and set temperature display (the display is built into the front access panel)
7. Refrigerant pipes, electrical cable(s) (covered with binding tape)
8. Condensate drain hose (covered with binding tape)
9. Refrigerant entry (for service and installer use only)
10. Outdoor unit air inlet (on rear & left side of unit)
11. Outdoor unit air discharge and protective grille (on front of unit)

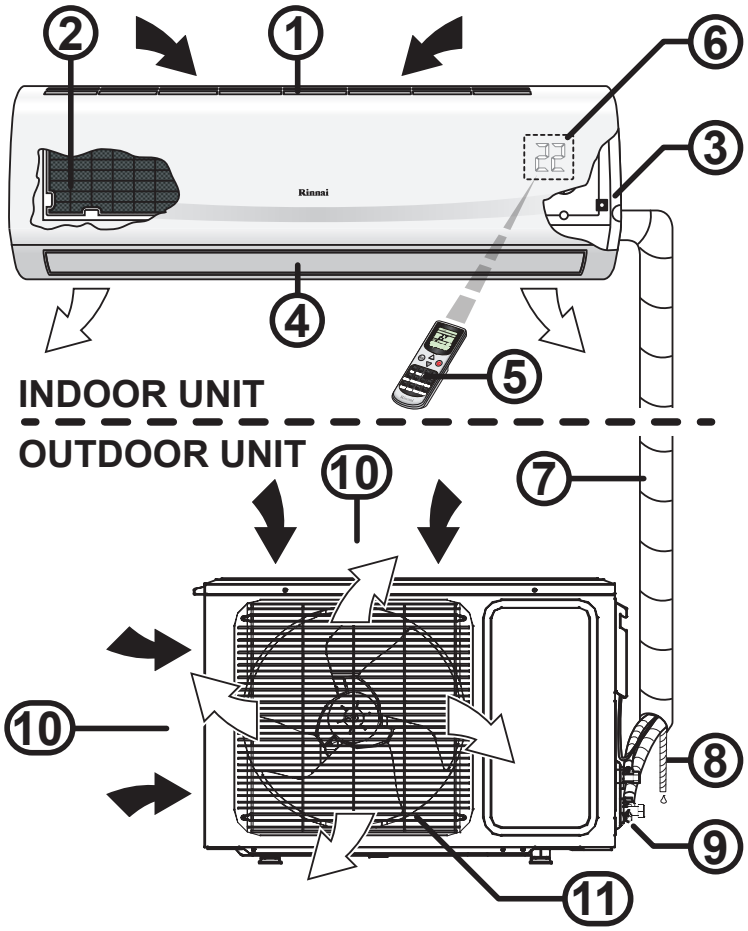

WEIGHTS & DIMENSIONS

Model			RINV25RB	RINV35RB	RINV52RB	RINV70RB
Weight	Indoor	kg	9.5	10	11	18
	Outdoor	kg	32	33	45	61
Dimensions (A / B / C)	Indoor	mm	880 / 205 / 286	880 / 205 / 286	940 / 222 / 300	1185 / 235 / 322
	Outdoor	mm	760 / 260 / 540	760 / 260 / 540	800 / 300 / 690	902 / 332 / 795

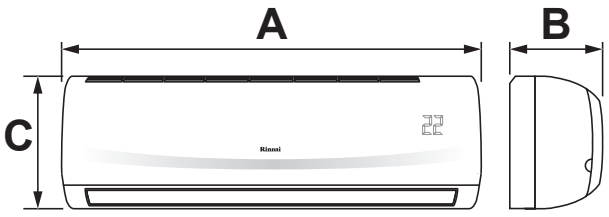

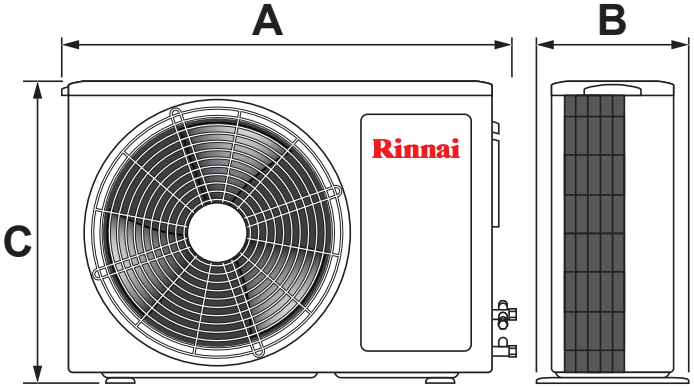

LOCATION

INDOOR UNIT

- Ensure the indoor unit is located away from heat or steam.
- Ensure the indoor unit is located so it can be accessed for service and replacement.
- Ensure the indoor unit is located so condensate can be drained away.
- Select a location where the indoor unit can be securely mounted.
- The clearances shown **MUST BE** maintained.

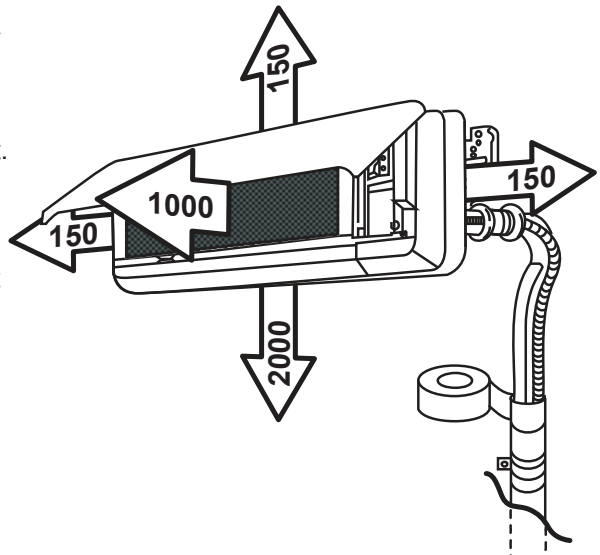

(All dimensions in mm)

OUTDOOR UNIT

- Select the location where exposure to direct sunlight and strong wind are minimised.
- Select the location where the outdoor unit can be securely mounted.
- Select the location where the noise and air flow will not cause nuisance.
- Ensure there are no obstructions in the air flow path.
- Ensure the out door unit is located so it can be accessed for service and replacement.
- Do not place animals and plants near the air discharge.
- The clearances shown **MUST BE** maintained.

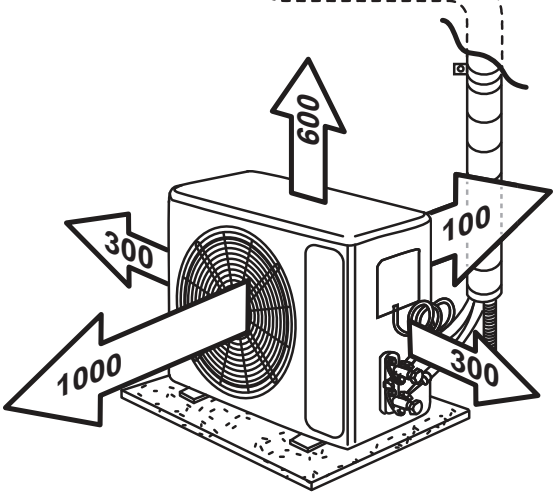

PIPE LENGTH & ELEVATION LIMITS

Models	Pipe Size				Standard Length	Maximum Length - X	Maximum Height -Y	Additional Refrigerant
	Gas		Liquid					
	mm	inch	mm	inch	m	m	m	g/m
RINV25RB	Ø9.52	3/8	Ø6.35	1/4	5	15	8	20
RINV35RB	Ø12.7	1/2	Ø6.35	1/4	5	15	8	25
RINV52RB	Ø15.88	5/8	Ø6.35	1/4	5	20	10	30
RINV70RB	Ø15.88	5/8	Ø9.52	3/8	5	25	10	40

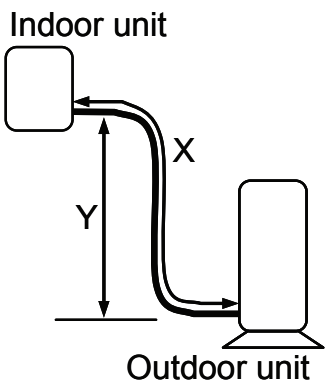

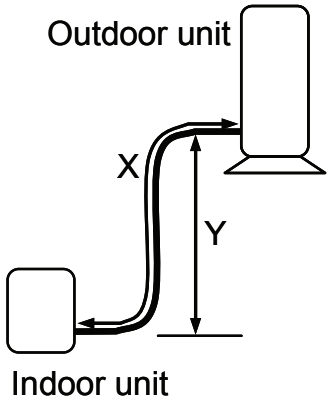

INDOOR UNIT

Wall Mounting Plate

1. The wall or structure on which the units are to be mounted must be capable of supporting the weight of the appliance and the associated pipe-work.
2. Fix the mounting plate on to the wall, ensuring that it is both level and firmly mounted with the appropriate fixings.

CAUTION **DO NOT install the unit in a place where electrical wiring or conduits are located**.

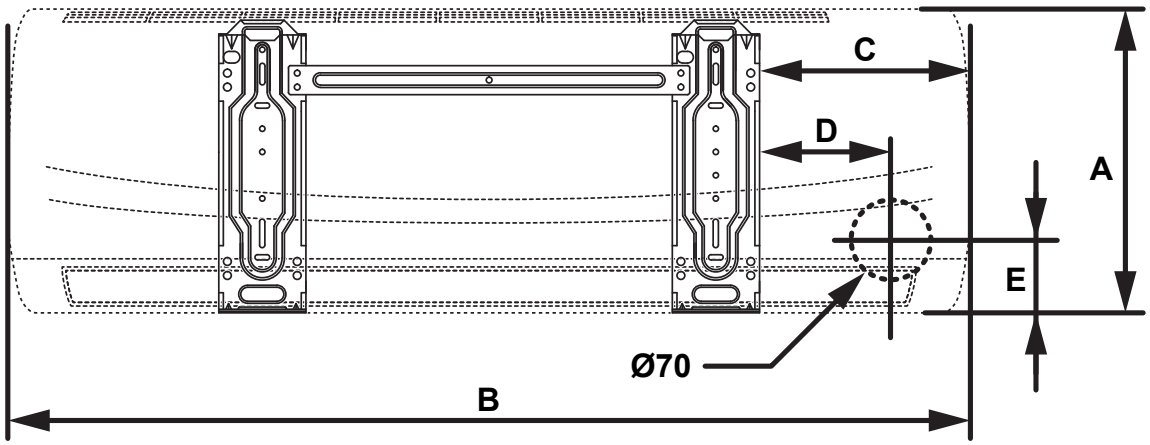

Wall Mounting Plate Positioning Dimensions (mm)														
2.5 kW / 3.5 kW					5.2 kW					7.0 kW				
A	B	C	D	E	A	B	C	D	E	A	B	C	D	E
286	880	195	58	37	300	940	180	77	50	320	1185	225	60	43

Wall Penetration

Drill a Ø70mm wall penetration through the wall with a 2° to 4° fall to the outside wall.

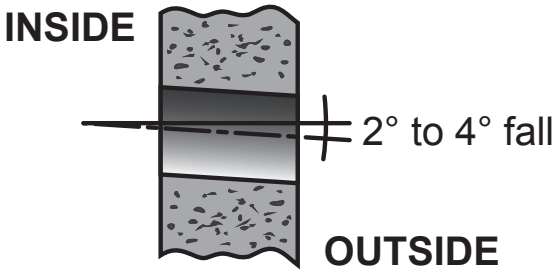

Drain Pipe

1. Connect the drain pipe to the drain hose outlet of the indoor unit,
2. Bind the joint with PVC insulation tape (not supplied).

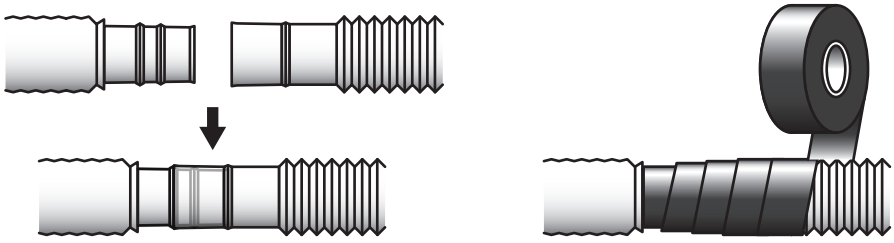

Electrical Connections

WARNING

Must be installed, maintained and removed by authorised persons in accordance with AS/NZS 3000 and all other relevant local regulations and municipal building codes including OH&S requirements.

Ensure electric wiring is installed properly. Improper installation may cause malfunction, fire, or electric shock.

The unit must be earthed following local electrical codes.

1. Open the front panel.
2. Remove the wiring cover.
3. Insert the electrical cable(s) through the bottom side at the back of indoor unit.
4. Secure the cable onto the control board with the cable clip.
5. Connect the cables as shown on the drawing to the corresponding terminals.

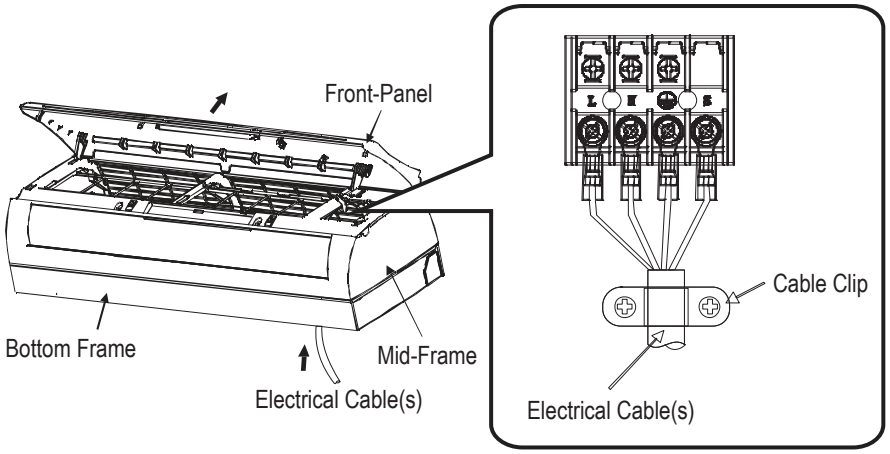

6. Re-install the wiring cover.
7. Close the front panel.

Wall Installation

1. Remove the two foam shipping blocks from the rear of indoor unit as shown.
2. Position the piping as shown on the drawing.
3. Tape the refrigerant pipes, electric cable(s) and drain hose. Ensure the water drain hose is located at the lowest side of the bundle.

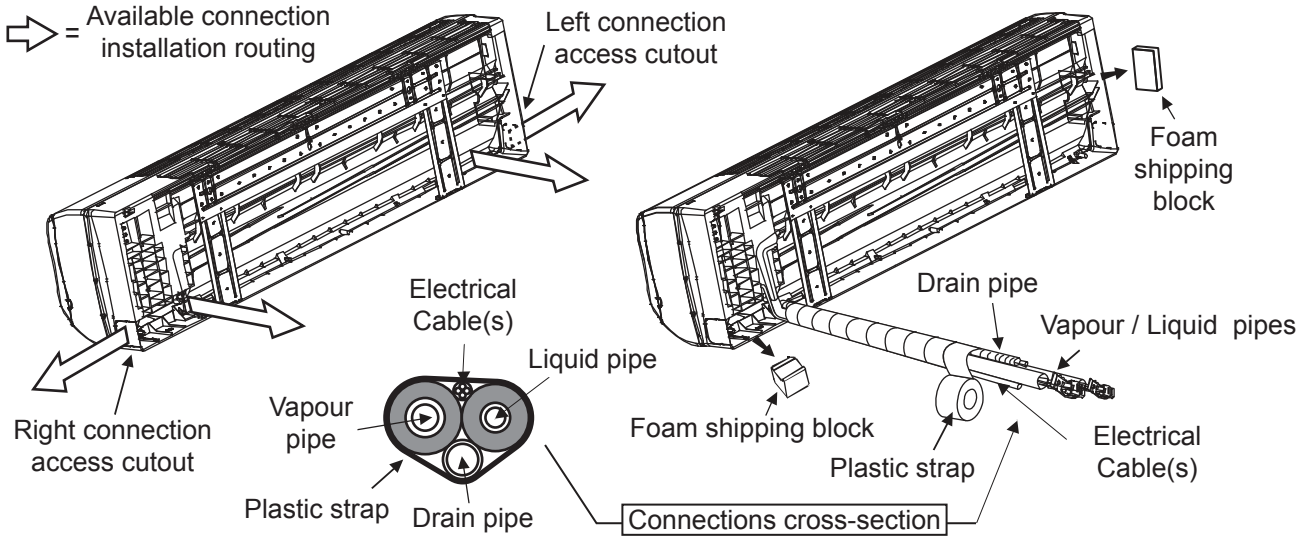

4. Hang the mounting slots of the indoor unit on the upper portion of the mounting plate. Ensure that the hooks are properly seated on the plate.
5. Push the unit towards to the wall, and hook the unit onto the lower fixing hook.

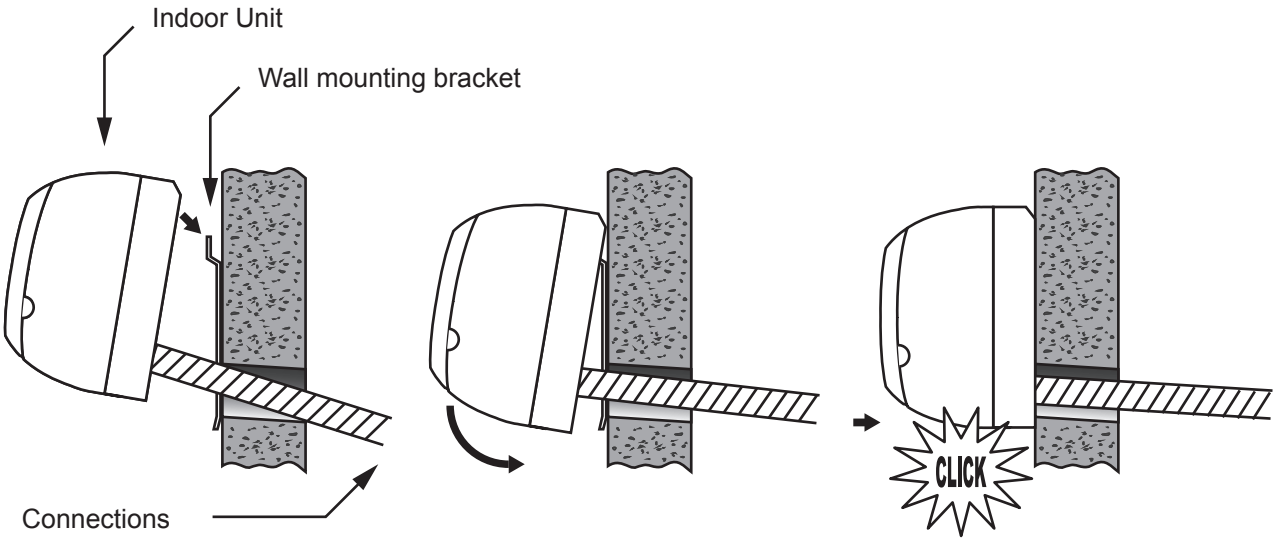

CAUTION

Ensure that there is no leakage from the drain pipe connection and that the drain pipe has a continuous fall to the outside.

Ensure that all wall penetrations are sufficiently weatherproofed.

OUTDOOR UNIT

Electrical Connections

WARNING

Must be installed, maintained and removed by authorised persons in accordance with AS/NZS 3000 and to all other relevant local regulations and municipal building codes including OH&S requirements.

Ensure electric wiring is installed properly. Improper installation may cause malfunction, fire, or electric shock.

The unit must be earthed following local electrical codes.

1. Remove the wiring cover.
2. Secure the electrical cable(s) and power cable onto the control board with the cable clip.
3. Connect the cables as shown on the drawing below.

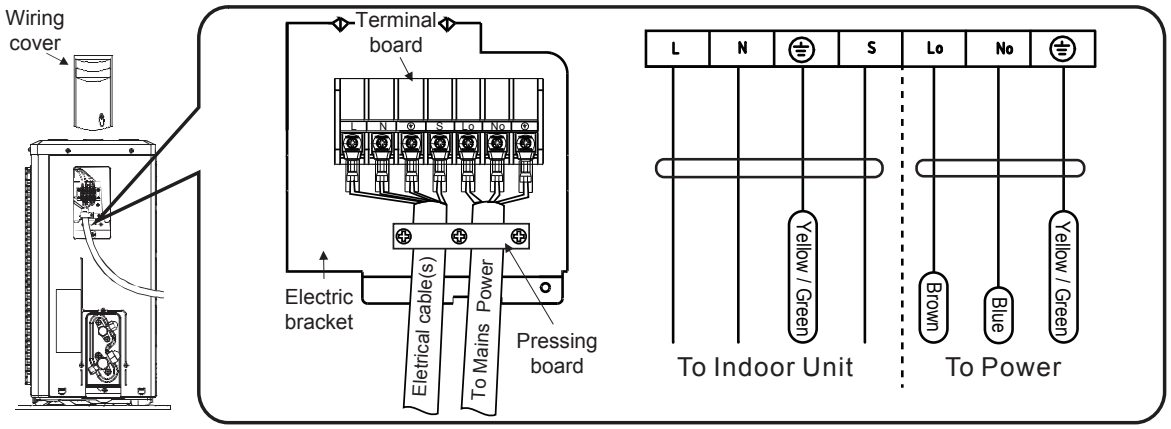

4. Re-install the wiring cover.

CONDENSATE DRAIN INSTALLATION

A condensate drainage point is provided in the base of the outdoor unit.

For the purposes of drainage a barbed elbow is also supplied.

Insert the barbed elbow into the drainage point of the outdoor unit as shown.

A drainage hose (installer to supply) will need to be fitted.

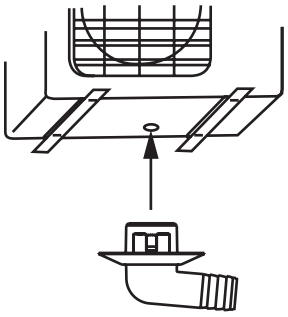

IMPORTANT

Drainage of the condensate must conform with all local regulations and municipal building codes including local OH&S requirements.

REFRIGERANT PIPES

Flaring

IMPORTANT

- **The main cause for refrigerant leakage is due to defects with the flaring work.**
- **The installer must ensure that all piping used complies with AS/NZS 1571:1995 - Copper - Seamless tubes for air conditioning and refrigeration and AS4041:2006 – Pressure piping.**
- **All pipework and fittings should be thoroughly examined for cleanliness and suitability for the system and refrigerant prior to assembling.**
- **All unsealed tubing must be thoroughly inspected and, if necessary, cleaned before assembly to remove any copper residue and/or scale particles such as dirt or metal.**
- **Metal filings must not be left in pipework after cutting as they can cause damage compressor (i.e. shaft seals, bearings, etc.).**
- **Pipes must be clean, burr free and not fallen in prior to assembly.**
- **For flare connections, a suitable lubricant must be used between the back of the flare and the nut to avoid tearing the flare when tightening the nut.**

Connecting Vapour / Liquid Pipes To Indoor & Outdoor Units

1. Align the centre of the pipes.
2. Sufficiently tighten the flare nut with fingers, then tighten with a spanner and torque wrench.

CAUTION

To prevent heat loss and wet floors due to dripping of condensation, both pipes must be properly insulated.

Pipe Dimensions (Ø)		Torque Wrench Setting
Metric	Imperial	
Ø 6.35 mm	Ø 1/4"	18 Nm
Ø 9.52 mm	Ø 3/8"	42 Nm
Ø 12.7 mm	Ø 1/2"	55 Nm
Ø 15.88 mm	Ø 5/8"	75 Nm

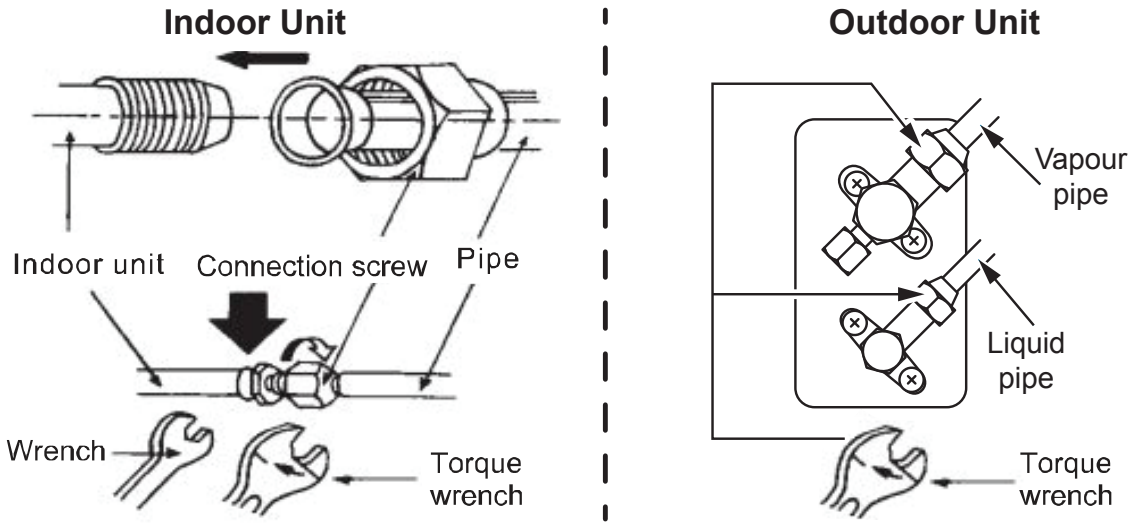

CAUTION

Ensure the joint nut is tightened firmly to avoid leakage.

Ensure that both the connections and the refrigerant pipes are wrapped with insulation material.

Air purging & Leakage Test

WARNING

DO NOT mix any substance other than the specified refrigerant (R410A) into refrigerant system.

When refrigerant gas leaks occur, ventilate the room immediately.

R410A, as well as other refrigerants, should always be recovered and never be released directly into the environment.

Use a vacuum pump for R410A exclusively. Using the same vacuum pump for different refrigerants may damage the vacuum pump or the unit.

CAUTION

It is necessary to purge air and check for gas leakage after piping work is completed.

If using additional refrigerant, perform air purging from the refrigerant pipes and indoor unit using a vacuum pump, then charge additional refrigerant.

Use a hex socket (3/16') to operate the service valves.

All refrigerant pipe joints to be tightened with a torque wrench at the specified torque.

Evacuation Vacuum Method / Leak Test

1. Remove the caps from the vapour valve, vapour valve service port and the liquid valve.
2. Connect charge hose from the low pressure gauge (manifold gauge set) to the vapour valve service port.
3. Open the low pressure gauge valve (manifold gauge set), turn on the vacuum pump and run for a minimum of 15 minutes.
4. Close low pressure gauge valve (manifold gauge set) and turn off vacuum pump.
5. Wait 2 minutes to allow pressure to stabilise, then check that the low pressure gauge is maintaining a pressure of -100 kPa (-76 cmHg).
6. Disconnect charge hose from the vapour valve service port and replace the vapour valve service port cap.
7. Open both the vapour and the liquid valves to charge the refrigerant system for test running.
8. Test run the system through both heating and cooling cycles and test for leaks.
9. Replace the vapour and liquid valve caps.

IMPORTANT

Both the vapour and liquid valve caps MUST BE on tight.

10. The system is now ready to run.

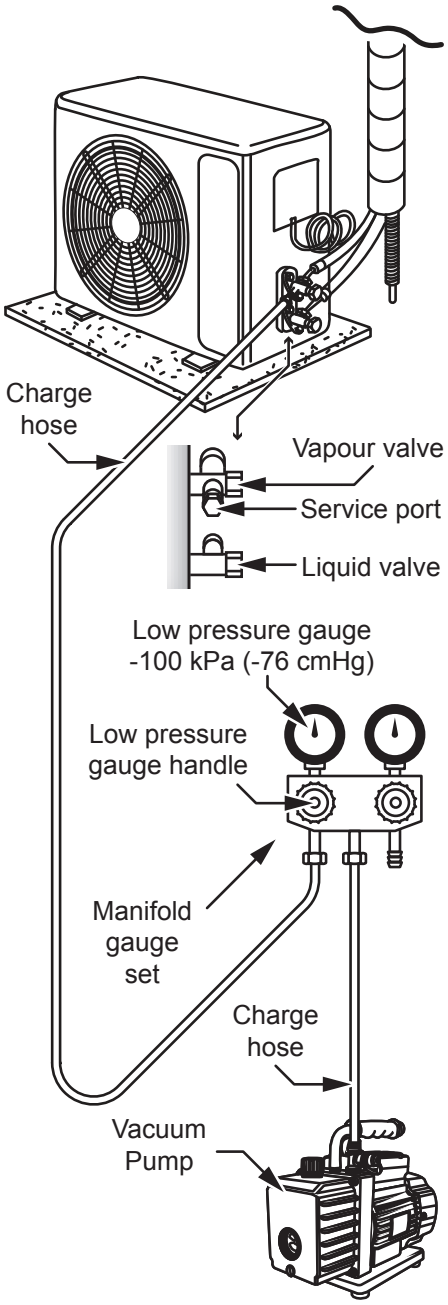

Adding refrigerant for longer line length

Additional refrigerant for longer piping runs can be added either at the time of evacuation of the new installation or whilst the unit is operating.

CAUTION

It is very easy to overcharge, take caution in charging refrigerant liquid and keep your eye on the scales to avoid overcharging the unit.

Take care not to discharge refrigerant into the atmosphere during installation, re-installation, repair or service.

FINAL CHECKLIST

IMPORTANT **The checklist is ONLY to be completed by an Authorised Person.**

Check Item	✓	What can happen if not checked
Is the indoor unit installed securely?		Falling, vibration, noise
Has an inspection been made to check for gas leakage?		No cooling or heating
Has all thermal insulation been completed (vapour pipes, liquid pipes, indoor portions of the drain hose extension)?		Condensation
Is the drainage secure?		Water leakage
Are the electric wires installed correctly?		No cooling or heating, may cause electrical shock or electrical fire.
Is the wiring in accordance within the specifications?		Operation failure, electrical fire
Are all inlets / outlets of the indoor and outdoor units free of any obstructions?		No cooling or heating
Are the stop valves open?		No cooling or heating
Are the pipes designed for use with R410A?		Pipe or pipe connection leakage
Has a leak test been carried out for the pipe connections?		Pipe connection leakage
Has air purging been carried out?		No cooling or heating
Has the appliance been tested for correct operation?		No cooling or heating
Is the end user fully aware of the operating procedure?		Incorrect operation

If you have answered no to any of the above, you must check and correct before appliance hand-over to customer.

Rinnai

Rinnai Australia Pty. Ltd. ABN 74 005 138 769

Head Office

100 Atlantic Drive,
Keysborough VIC 3173

P.O. Box 460
Braeside, Victoria 3195

Rinnai has a Service and Spare Parts network with personnel who are fully trained and equipped to give the best service on your Rinnai appliance. If your appliance requires service, please call our National Help Line. Rinnai recommends that this appliance be serviced every 1 years.

Product Sales and Service - National
Phone: 1300 555 545* Fax: 1300 555 655*
Technical Helpline and Spare Parts
National (Mon-Fri 8am - 5.30pm EST)
Phone: 1300 555 545* Fax: 1300 300 141*
Cost of a local call higher from mobile or public phones.

E-mail: enquiry@rinnai.com.au

For further information visit: www.rinnai.com.au