MODELS

RL750
RL1000
RL1300
RL1500
RL1800
RL2200

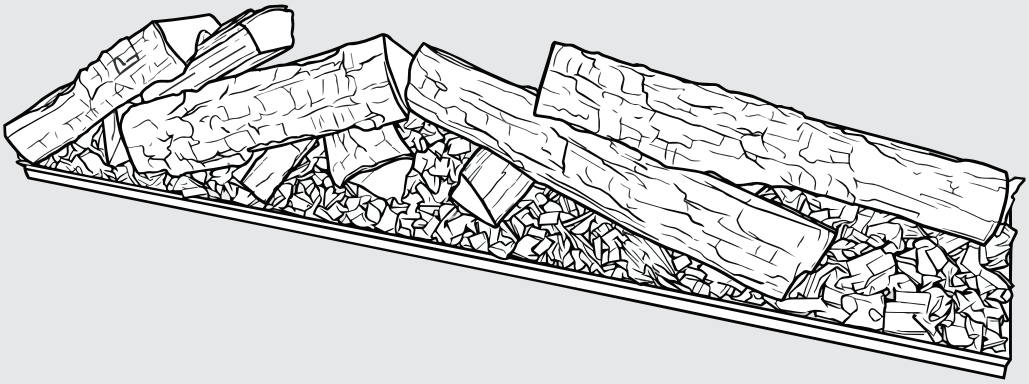

Rinnai RealLog Set

Installation Manual

Rinnai

Congratulations on the purchase of your Rinnai Real Log Insert for your Electric Fire Heater. We trust you will have many years of comfort and enjoyment from the purchase.

IMPORTANT

BEFORE USING THIS APPLIANCE.

Before proceeding with the installation of your new Log Insert, please read this manual thoroughly and gain a full understanding of the requirements.

Due to the use of naturally sourced materials, natural variances between products are unavoidable and do not constitute manufacturing defects.

Please keep product away from excessive moisture and avoid high humidity environment.

This product is an accessory which is compatible with Rinnai EL & ES series Electric Fire Heater. This manual is to be read in conjunction with its respective heater installation manual.

For continued safety of this appliance, it must be installed and maintained in accordance with the manufacturer's instructions.

Step 1: Glass Removal - Accessing Fuel Bed

To gain access to fuel bed for installation, follow steps as shown in "Figure 1." through to "Figure 4." to remove the glass panel on the front of the appliance.

Figure 1.

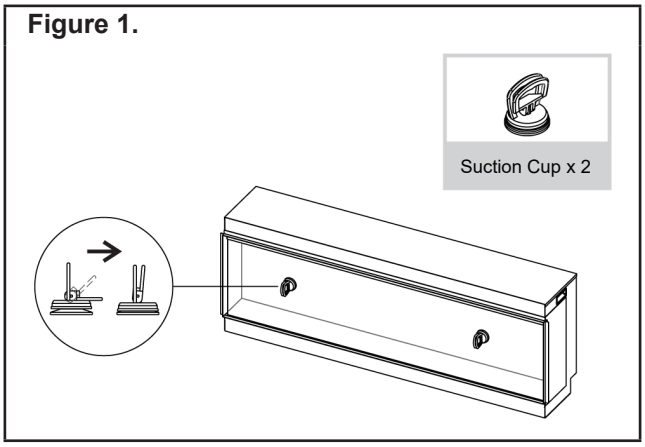

Figure 2.

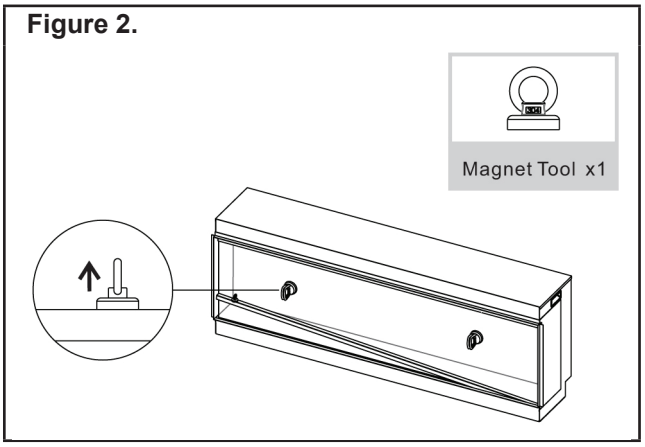

Figure 3.

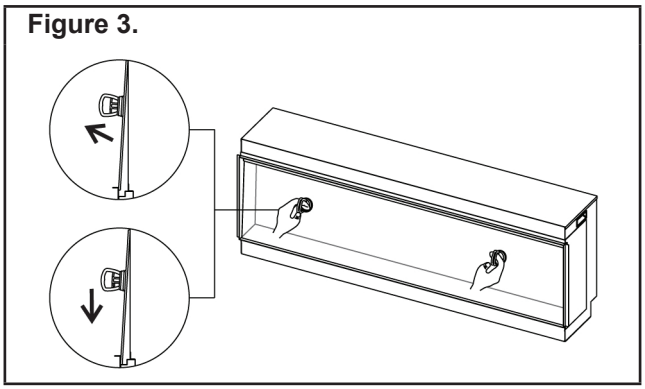

Figure 4.

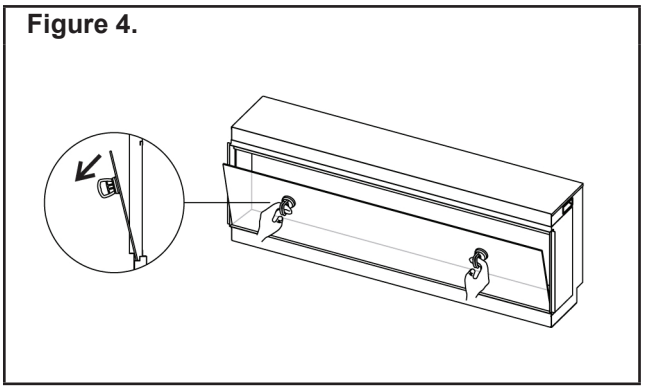

NOTE

Suction cups and magnetic tools are provided with the ES / EL Electric Fire Heater.

Set aside both the "*SHELF SUPPORT BRACKET*" and the "*FRONT GLASS PANEL*".

Step 2: Remove the fuel bed tray

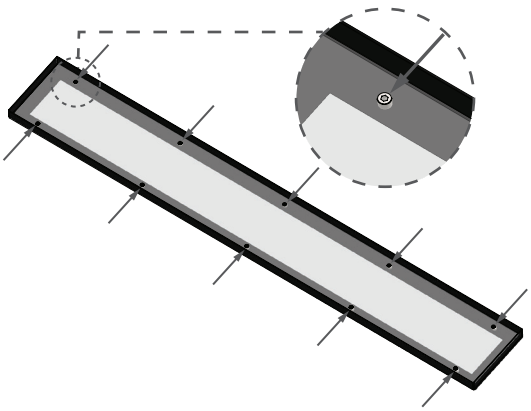

The fuel bed tray is secured to the main cabinet with multiple screws. Undo all screws to remove the original fuel bed and frame assembly.

Step 3: Replace the fuel bed tray with the RLxxxx accessories.

Step 4: Replace the glass and frame assembly

Complete the setup by carefully re-fitting the front glass using the suction cups, then re-fit the glass by completing Step 1 in reverse.

Rinnai Australia Pty Ltd

ABN 74 005 138 769 | AU45204

88 Mills Road, Braeside, Victoria, 3195
P.O. Box 460, Braeside, Victoria 3195
Tel: (03) 9271 6625

Customer Support
Tel: 1300 555 545*
Monday to Friday, 8.00 am to 5.00 pm EST.

**Cost of a local call may be higher from a mobile phone. (National calls from public phones in Australia are free.)*

For further information visit **www.rinnai.com.au** or email **enquiry@rinnai.com.au**

Rinnai has a Service and Spare Parts network with personnel who are fully trained and equipped to give the best service on your Rinnai appliance. If your appliance requires service, please call Customer Support.

With our policy of continuous improvement, we reserve the right to change, or discontinue at any time, specifications or designs without notice.

B065966

RealLog Set OIM – Issue 1 – October 2026